An experiment based on the generation of positive and negative gravitational fields by the accelerated motion of positive charges

Xiangqian Zhang, Yuchuan Xu

(Anhui Develop Amorphous Equipment Co., Ltd., Hefei, Anhui 231500)

Abstract: The phenomenon of electromagnetic induction, first studied by Michael Faraday in 1831, has become an important milestone in physics, revealing the intrinsic connection between electricity and magnetism and ushering in a new era of large-scale human utilization of electrical energy. Subsequently, scientists further developed classical electromagnetism and formed a systematic electromagnetic theory. After proposing the theory of relativity in the early 20th century, Albert Einstein sought to unify electromagnetism and gravity. Although he did not succeed, his efforts pointed the way for future scientific exploration[1][2]. People have found that electromagnetic fields and forces can be easily shielded, whereas gravitational fields and gravity cannot be "blocked" or "neutralized". No known matter or field is immune to gravity, making it impossible to create a perfect gravitational shield. The aim of this study is to explore the relationship between electromagnetic and gravitational fields. We first theoretically deduce that an accelerating positive charge generates a gravitational field in the direction opposite to its acceleration, and then verify this through experiments. Furthermore, we demonstrate that when the gravitational field generated by a changing electric field is in the same direction as Earth's gravitational field, it constitutes a positive gravitational field; when it is in the opposite direction, it constitutes a negative gravitational field.

Key words: unified field theory; accelerated motion of positive charges; positive gravitational field; negative gravitational field

1. Theoretical Derivation of the Generation of Gravitational

Fields by the Accelerated Motion of Positive Charges

1.1 Basic Assumptions

In the universe, any object is always surrounded by space that spreads uniformly outward in all directions with a vector light speed C' (where capital letters in this paper denote vectors), in the form of a cylindrical helical motion—a combination of rotational motion and linear motion perpendicular to the plane of rotation. A field is the effect of this kind of motion of space.

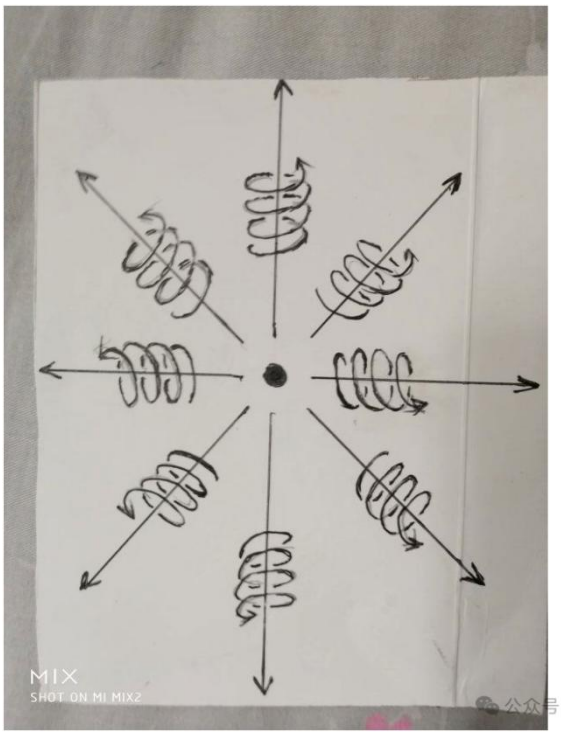

公众号 · 张祥前

The linear motion component corresponds to the electric field, the rotational motion component corresponds to the magnetic field, and the first loop of the cylindrical helical rotation—pointing toward the mass point (for simplicity, the object is treated as a point, referred to as a mass point)—represents the gravitational field. The three

fields are mutually perpendicular.

A positive electric field generated by a positive charge represents space spreading outward at the speed of light, while a negative charge corresponds to space converging inward.

A stationary object also has a magnetic field around it, but on any given surface, the number of magnetic field lines entering equals the number exiting. These lines cancel each other out, resulting in no observable external magnetic effect.

The above assumptions mentioned that space itself is moving.

To describe the motion of space itself, we divide space into many small units called space points. By describing the motion of these space points, we can describe the motion of space itself.

The above assumptions mentioned the vectorial light speed.

The text argues that the speed of light can be extended to a vector quantity, where the direction of vectorial light speed can change. The magnitude of this vectorial speed is the scalar speed of light, denoted by the lowercase letter c, which remains constant.

When the particle at point **o** is stationary relative to the observer, a surrounding space point, denoted by **p**, moves outward in a radial motion with a vectorial speed C'. When the point **o** moves with a velocity V relative to the observer, the velocity of point **p** relative to the observer is represented by the vectorial speed C.

C' and C have the same magnitude but different directions. Does the relationship between C' and C conform to the Lorentz transformation of relativity?

According to the Lorentz velocity transformation, the relationship between the three components Cx', Cy', Cz' of C' and the three components Cx, Cy, Cz of C is given by:

$$Cx' = \frac{(Cx - v)}{[1 - (Cx\frac{v}{c^2})]}$$

$$Cy' = \frac{[Cy\sqrt{(1 - \frac{v^2}{c^2})}]}{[1 - (Cx\frac{v}{c^2})]}$$

$$Cz' = \frac{[Cz\sqrt{(1 - \frac{v^2}{c^2})}]}{[1 - (Cx\frac{v}{c^2})]}$$

From the above, it can be derived:

$$(Cx')^2 + (Cy')^2 + (Cy')^2$$

$$= \frac{[(Cx - v)^2 + Cy^2(1 - \frac{v^2}{c^2}) + Cz^2(1 - \frac{v^2}{c^2})]}{[1 - (Cx\frac{v}{c^2})]^2}$$

$$= c^2c^2\frac{[Cx^2 + Cy^2 + Cz^2 - 2Cxv + v^2 - (c^2 - Cx^2)\frac{v^2}{c^2}]}{(c^2 - \vec{C}xv)^2}$$

$$= c^2c^2\frac{[c^2 - 2Cxv + v^2 - (c^2 - Cx^2)\frac{v^2}{c^2}]}{(c^2 - Cxv)^2}$$

$$= c^2\frac{[c^2c^2 - 2c^2Cxv + Cx^2v^2]}{(c^2 - Cxv)^2}$$

$$= c^2$$

From this, it can be derived that the vector velocities C and C'

satisfy the following relationship:

$$C' \cdot C' = C \cdot C = c^2$$

C and C' have different directions, but their magnitudes are equal.

When point **o** is moving with velocity V relative to the observer, let point **p** have a velocity U relative to point **o**. Since C is the composition of U and V, we have $C = U + V$.

Therefore:

$$U = C - V.$$

1.2 Understanding the Gravitational Field

When we stand on Earth and casually release a stone, it falls freely toward the center of the Earth with acceleration.

Even without the stone, the space where the stone would have been is still “falling” toward the Earth’s center in the same way. This is the essence of the gravitational field.

The essence of a gravitational field is the acceleration of the surrounding space itself toward the mass center of an object.

A gravitational field has two important properties:

The position vector from the object to a point (which we call the field point or observation point) in the gravitational field is opposite in direction to the gravitational field.

A gravitational field can accelerate any object made of any kind

of material.

Now let us consider a positive charge **o** with electric charge **q** that is stationary relative to the observer. At a point **p** in the surrounding space, **o** produces an electrostatic field E.

According to the earlier analysis of vector light speed, suppose that at time zero, point **o** begins to move with velocity V. This will change the original light-speed motion at point **p** from C to $C - V$, causing point **p** to also have a velocity of $-V$.

When point **o** suddenly undergoes uniform acceleration A along the positive x-axis relative to us (where $A = dV/dt$, magnitude a), point **p** will also have an acceleration of $-A$.

This is because taking the time derivative of $C - V$ gives:

$$d(C - V)/dt = dC/dt - dV/dt$$

From the earlier definition that the gravitational field is the acceleration of space at point **p** toward mass point **o**, the gravitational field $-A = -dV/dt$ (magnitude of A is a) should be equivalent to the acceleration $-dV/dt$ of space at point **p** toward point **o**.

Therefore, the position of point **p** in space will experience a gravitational field $-A$ due to the accelerated motion of point **o**.

Next, we will determine the relationship between the electrostatic field Er, the acceleration-induced distorted electric

field $E\theta$, and the gravitational field $-A$.

Imagine that the positive point charge **o** remains stationary at the origin of a Cartesian coordinate system relative to us until time $t = 0$, when it begins moving along the positive x-axis with constant acceleration $A = dV/dt$ (magnitude a).

At time $t = \tau$, point **o** reaches point **d** and stops accelerating, at which moment its velocity has reached $v = a\tau$. After that, it continues moving at constant velocity v along the x-axis until it eventually arrives at point **q**.

As shown in the figure below:

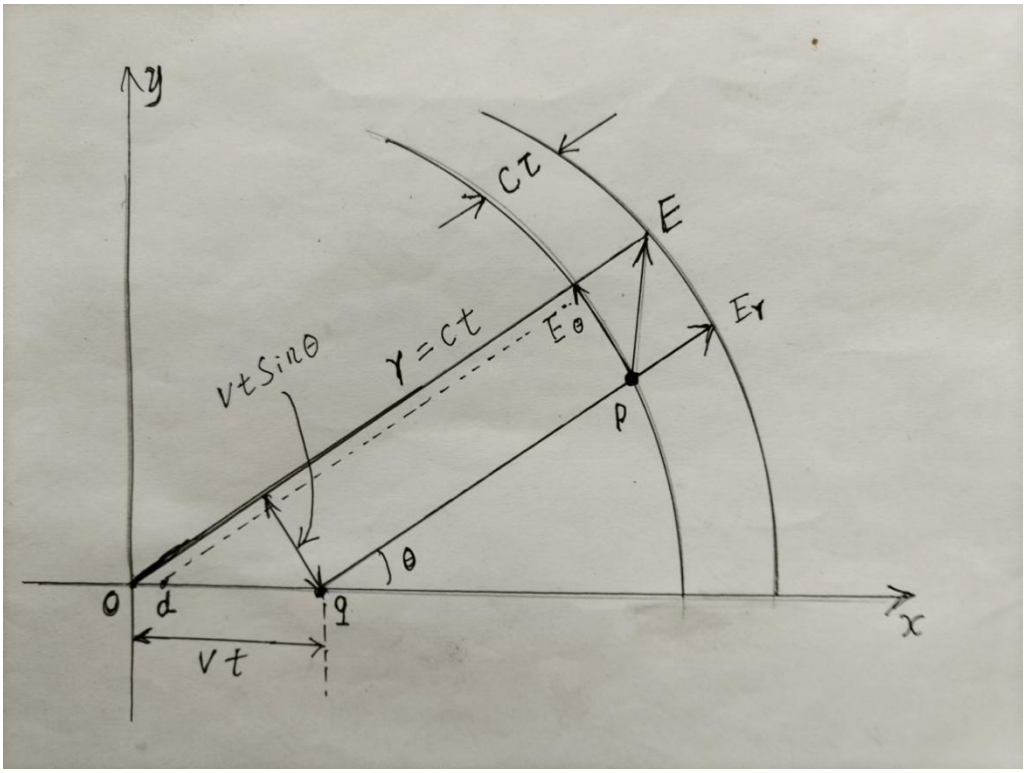

For simplicity, we consider the case where v is much smaller than the speed of light c, and the distance od is much smaller than oq.

Now let us examine the distribution of the electric field around charge **o** at an arbitrary time t (with $t \gg \tau$).

During the time interval from $t = 0$ to $t = \tau$, the accelerated motion of the positive point charge **o** causes a distortion in the surrounding electric field lines, and this distorted state propagates outward at the speed of light c.

From the earlier assumption, the electric field lines of a positive charge correspond to the displacements of space points moving outward at the speed of light.

The propagation of the above distorted state at the speed of light is analogous to water being sprayed uniformly in all directions from a faucet: once the faucet shakes slightly, the water stream is disturbed, and that disturbance will also propagate outward at the speed of the water flow.

The distortion of the electric field caused by the accelerated motion of charge **o** propagates outward at speed c. In the figure above, the thickness of this distorted region is $c\tau$, sandwiched between two spherical surfaces.

The rear spherical surface, at time t, has already propagated outward a distance $c(t - \tau)$, forming a sphere centered at point **q** with diameter $c(t - \tau)$.

The front spherical surface, at time t, has propagated outward

a distance ct, forming a sphere centered at point **o** with diameter ct.

Since from $t = \tau$ onward charge **o** moves with constant velocity, the electric field inside the sphere of diameter $c(t - \tau)$ should be that of a uniformly moving point charge.

Given our earlier assumption that $v \ll c$, this electric field can be approximated as an electrostatic field at any moment. At time t, the field lines of this electric field are radial lines emanating from the position **q** where point **o** is located at time t.

Since $t \gg \tau$ and $c \gg v$, we have $r = ct \gg v\tau/2$ (which is the distance from point **o** to point **d**). Therefore, the front and rear spherical surfaces of the distorted region are almost concentric.

As time goes on, the radius ct of the distorted region expands continuously, propagating outward at the speed of light.

It should be understood that the distortion of electric field lines does not change the number of electric field lines which remain continuous. Therefore, the number of electric field lines across the front and rear boundaries of the distorted region is equal.

When $v \ll c$, the distorted electric field lines can be regarded as straight lines.

Let us take the electric field line making an angle θ with the x-axis for analysis.

Because the distance od is much smaller than $r = ct$, we can treat points **o** and **d** as coincident (i.e., $od \approx 0$).

We have: $oq = v\tau/2 + v(t - \tau) \approx vt$

Inside the distorted region, the electric field E can be decomposed into two components:

- Er: the radial electric field, which exists even when the charge is stationary (magnitude er);
- $E\theta$: the transverse electric field, which can be regarded as the change in Er caused by accelerated motion (magnitude $e\theta$).

From the figure, at observation point **p**, the static electric field er, the distorted electric field $e\theta$, the acceleration $-a$ of space point **p**, and the position vector R from **o** to **p** (magnitude r) satisfy:

$$e\theta/er = -vtsin\theta/c\tau = -atsin\theta/c = -arsin\theta/c^2$$

The above shows that the essence of the gravitational field is the acceleration of space point **p**. However, the direction of the gravitational field is opposite to the position vector R from the source of the gravitational field to the field point **p** (magnitude r).

In the above expression, replacing $r = ct$ with the vector R, and denoting the gravitational field as $-A$ (magnitude $-a$), we obtain:

$$E\theta/er = -A \times R/c^2$$

Here, the electric field $E\theta$ can be regarded as the variation in

Er caused by the acceleration of the charge.

$E\theta$ is perpendicular to the direction of electromagnetic propagation (i.e., the direction of Er) and exists only in the distorted region. Therefore, it is the transverse distorted electric field produced when charge **o** undergoes accelerated motion.

The above expression gives the relationship among the static electric field Er at observation point **p**, the transverse field $E\theta$ due to acceleration, and the gravitational field $-A$ at point **p** generated by the acceleration A of charge **o**[3].

The following is an experiment demonstrating the gravitational field generated by an accelerating positive charge, opposite in direction to the acceleration.

2. Experimental Study

2.1 Experimental Preparation

A specially manufactured hollow-core cable is used, containing no internal conductor—only an outer insulating sheath. The inner layer is silicone rubber with a dielectric constant of 2.8–3.4, and the outer layer is polyethylene with a dielectric constant of 2.0–2.4. The cable's outer diameter is 12 mm, with a central hole of 1.6 mm in diameter.

From both ends of the cable, an enameled round copper wire of 1.5 mm diameter is inserted, with the two wires not touching, leaving

a 50 mm gap between them (see Figure 2).

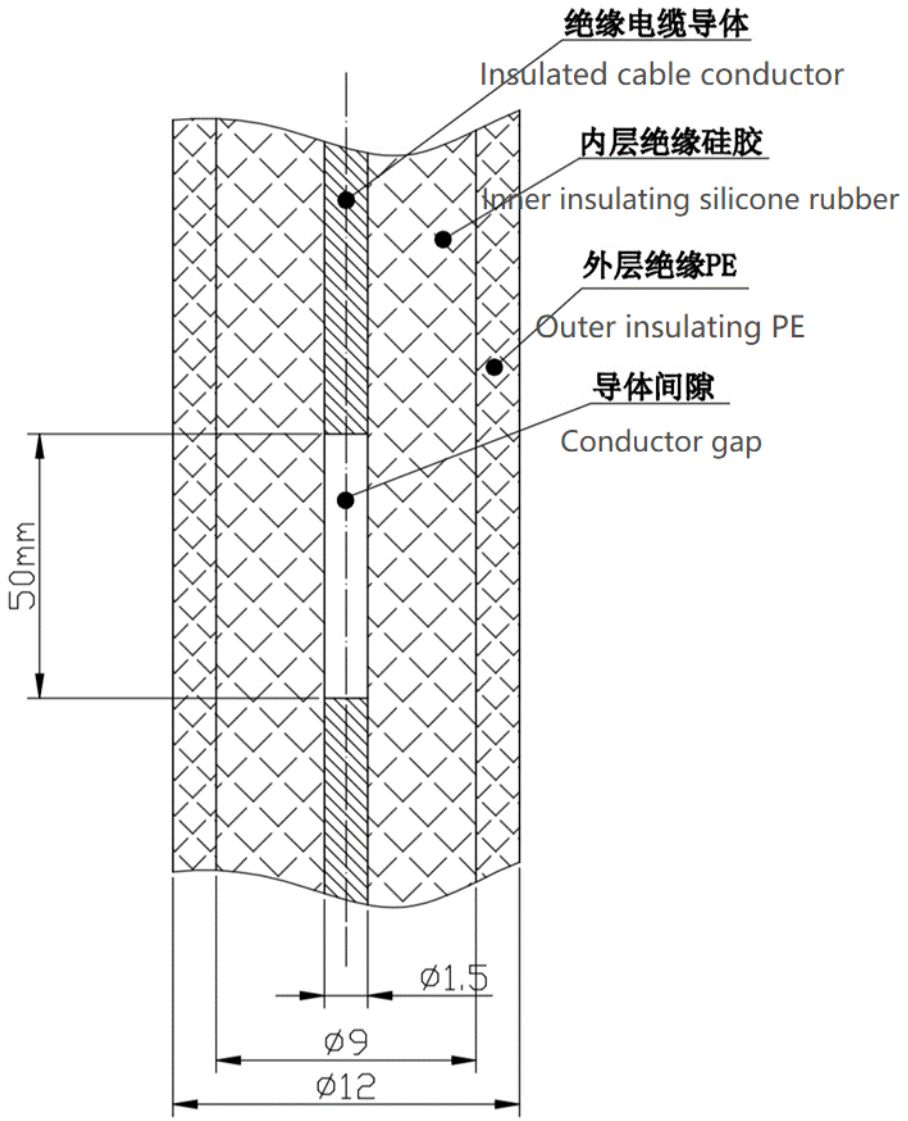

图二. 绝缘电缆

Figure 2. Insulated cable

The following experimental apparatus was prepared:

- Electronic weighing instrument
- Support stand 1 and support stand 2

- Special hollow-core cable
- Ceramic tube
- Test mass
- High-voltage DC power supply

The support stands are made of epoxy material (dielectric constant: 3.5–5). The ceramic tube is 95% alumina (dielectric constant: 9–9.5).

Note: The electronic weighing instrument must have good electromagnetic interference resistance, and the weighing platform should be equipped with a metallic shielding cover.

2.2 Experimental Method

The experiment was conducted under normal temperature and atmospheric pressure. The experimental setup is shown in Figure 1.

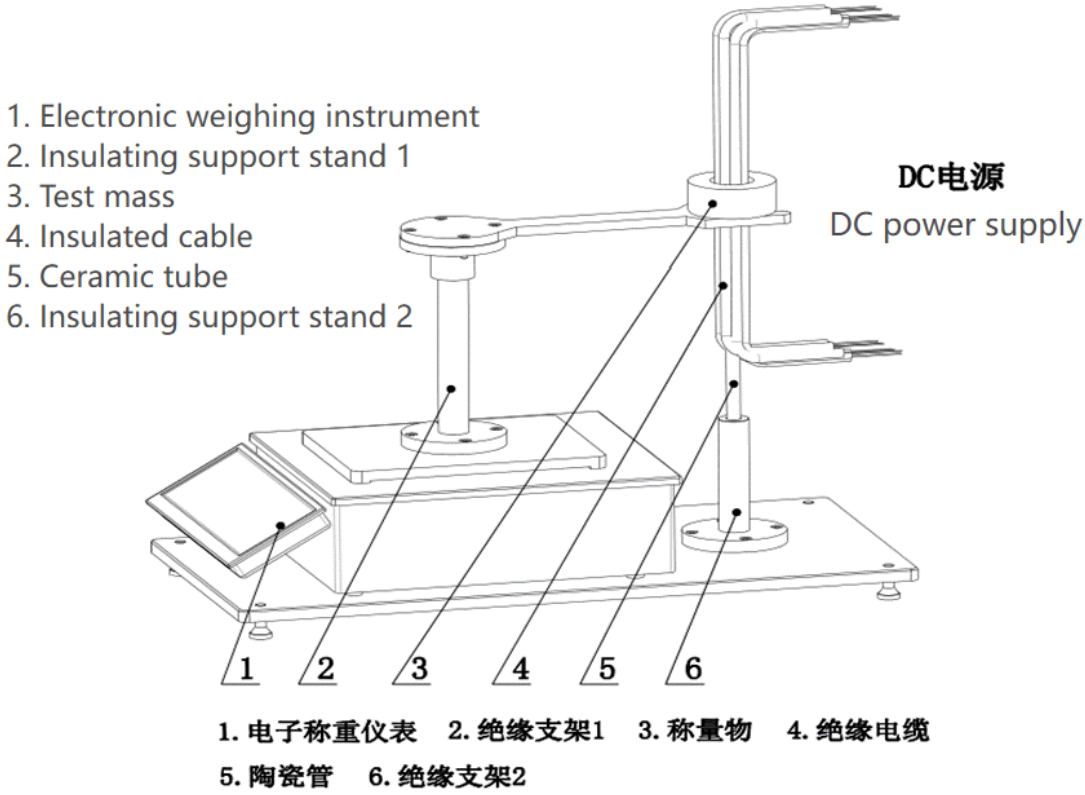

图一. 正、反引力场试验称量装置

Figure 1. Experimental weighing device for positive/negative gravitational fields

1. Bind one high-voltage special cable (with a central gap) and the ceramic tube together in parallel.
2. Fix the lower end of the ceramic tube onto support stand 2, ensuring that both the cable and ceramic tube are vertical to the ground.
3. Place the test mass around the cable, aligned with the central gap of the cable. The test mass should be made of insulating material—nylon is used in this experiment.

   The nylon ring is cut into two halves, with an inner diameter of 40 mm, outer diameter of 100 mm, height of 50 mm. It does

not touch the cable, maintaining a gap of 5 mm.

4. Connect the upper end of the cable to the positive terminal of the power supply and the lower end to the negative terminal. Set the DC voltage to 55 kV. Upon switching on the power supply, the reading on the weighing instrument decreased by 0.83–1.20 g. When the DC power is switched off, the reading returns to its original value.
5. Reverse the polarity: connect the upper end of the cable to the negative terminal and the lower end to the positive terminal, keeping the voltage at 55 kV. Upon switching on, the weighing instrument reading increased by 0.76–1.08 g. When the power is switched off, the reading returns to its original value.
6. Bind seven high-voltage special cables (each with a central gap) around the ceramic tube, ensuring the gap positions of all seven cables are aligned (see Figure 3).

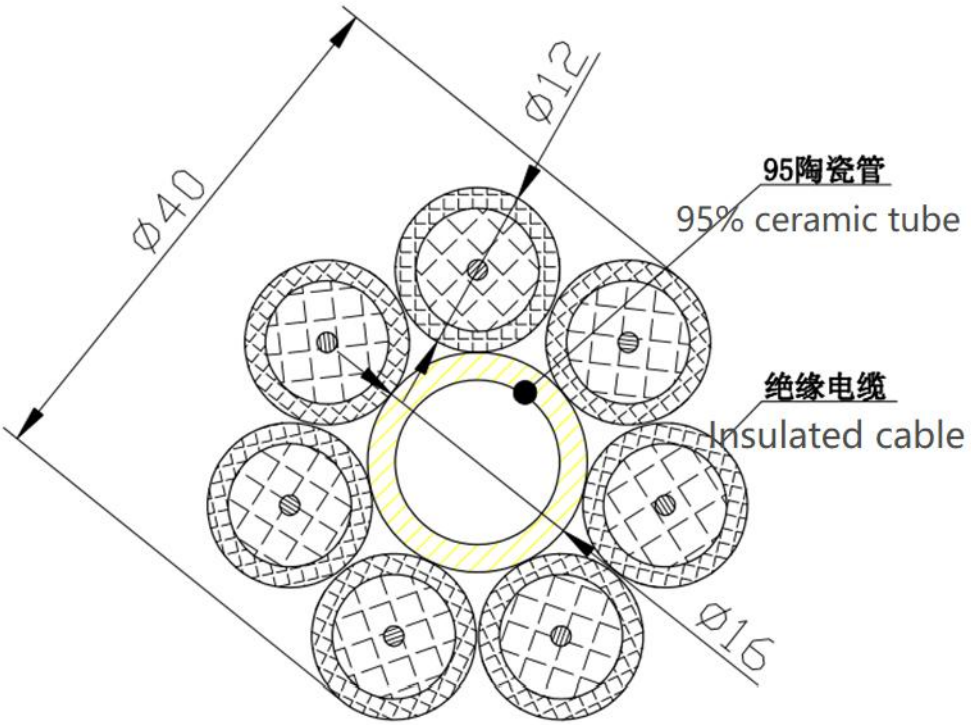

图三. 绝缘电缆组装

Figure 3. Insulated cable assembly

7. Place the nylon ring halves (inner diameter 50 mm, outer diameter 100 mm, height 50 mm) so that the gap aligns with the gap positions of the cables. The inner hole of the nylon ring does not touch the cables, maintaining a gap of 5 mm.
8. Connect the upper end of each cable to the positive terminal of the power supply and the lower end to the negative terminal. Set the voltage to 55 kV, and simultaneously switch on all seven power supplies. The reading on the weighing instrument

decreased by 6.17–8.36 g.

9. Reverse the polarity by connecting the upper end of each cable to the negative terminal and the lower end to the positive terminal, keeping the voltage at 55 kV. Upon switching on the power supplies, the reading on the weighing instrument increased by 5.47–7.63 g. When the power is switched off, the reading returns to its value before the power is applied.

3. Conclusion

3.1 Experimental Notes

In this experiment, the applied voltage is 55 kV, and the current for each cable is less than 30 μA. The electric field is enclosed within the 150 kV-rated insulated cable, ensuring that ion wind effects and electrostatic motor effects could not influence the weight of the test mass.

The polarization effect of the insulated cable weakens the external electric field strength; thus, after several on–off power cycles, the gravitational field effect decreases. It is necessary to replace the insulated cable and ceramic tube to maintain performance.

Special attention should be paid to verifying that after placing the cables and support stand 2, and removing support stand 1 and the test mass, switching on the power does not cause the electronic

weighing instrument to register any change due to electromagnetic interference.

3.2 Experimental Conclusion

At the moment power is applied, the voltage in the conductor rises from 0 to 55 kV, producing a changing electromotive force. Under this changing electromotive force, the positive charges in the conductor accelerate in place toward the negative electrode in an oscillatory manner (note that the displacement of the positive charges may be very small, appearing as if they are vibrating in place).

This process generates in the surrounding space a gravitational field α directed toward the positive electrode. If α is oriented vertically upward, opposite to the Earth's gravitational field A, it constitutes a negative gravity field. The vector combination of A and α yields a new gravitational field strength of A−α, causing the test mass to become lighter by 6.17–8.36 g (see Figure 4).

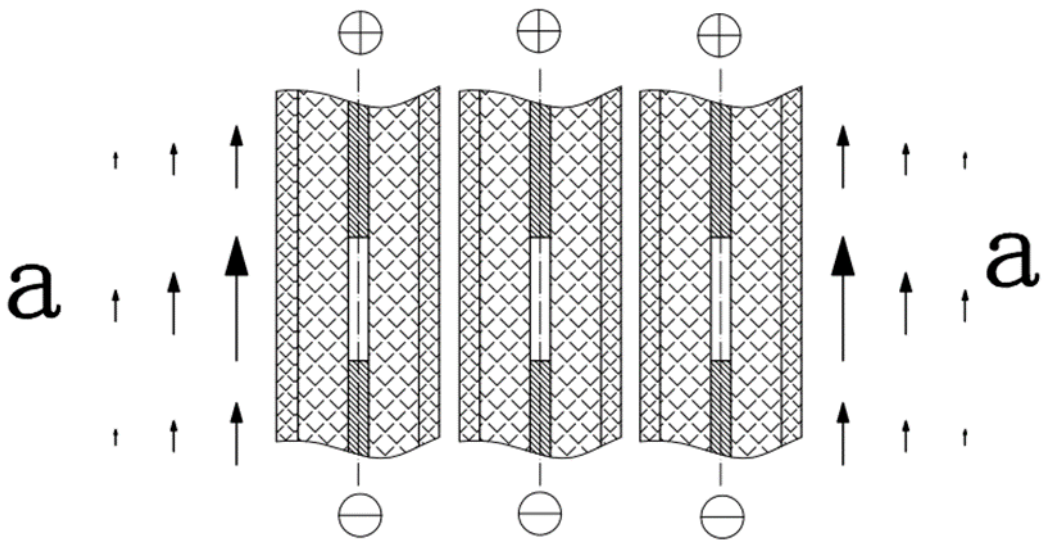

图四. 反引力场（a方向与地球引力场A方向相反）

Figure 4. Negatvie gravitational field
(direction a opposite to Earth's gravitational field direction A)

When the polarity of the circuit is reversed, the generated gravitational field α points in the same direction as the Earth's gravitational field A, forming a positive gravitational field. The resultant gravitational field becomes A+α, increasing in strength, which caused the test mass to become heavier by 5.47–7.63 g (see Figure 5).

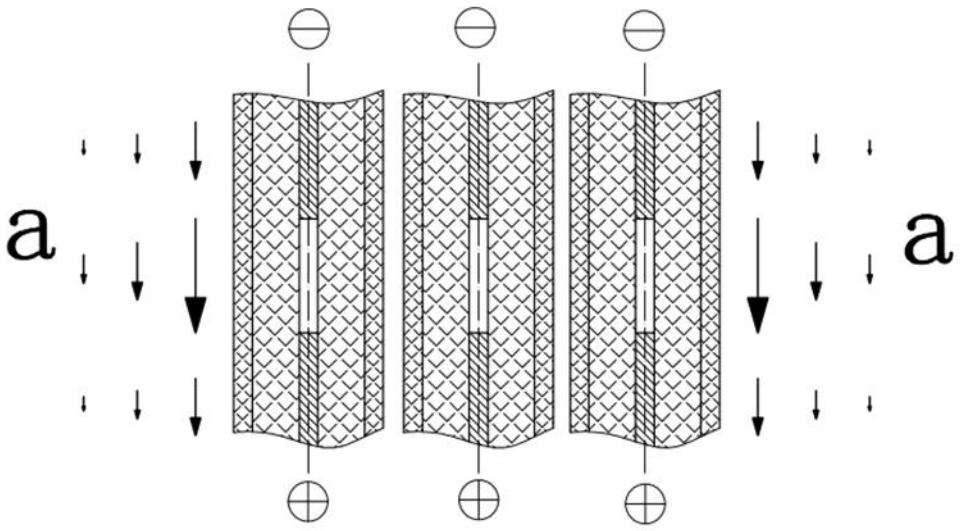

图五. 正引力场（a方向与地球引力场A方向相同）

Figure 5. Positive gravitational field
(direction a same as Earth's gravitational field direction A)

4. Experimental Prediction

The power supply used in the experiment requires a millisecond-scale response time to ramp from 0 V to 55 kV. If the power supply could achieve this voltage rise in only a few nanoseconds—or even picoseconds—the observed weight change (both increase and decrease) of the test mass would be greatly enhanced.

Because the accelerated positive charges are confined within the conductor, and because of the complex internal conditions of the

wire, the gravitational field effect is severely limited. If positive charges could be accelerated in a straight path or in an accelerated circular path in vacuum, the magnitude of both positive and negative gravity field effects would be significantly increased.

References

[1] 电磁学/赵凯华, 陈熙谋 高等教育出版社, 2003.4.

[2] 爱因斯坦晚年文集/爱因斯坦(Einstein.A.)著; 方在庆等译. 北京大学出版社, 2008.1.

[3] Zhang, X. (2025). Unified Field Theory (Academic Edition). Hope Grace Publishing.